Lessons Learned From Structural Failures

Presented by: **Clifford Schwinger, PE**

THE HARMAN GROUP
structural engineering
parking planning and design

PHILADELPHIA | NEW YORK

October 15, 2019 DVASE Breakfast Presentation

DVASE | Delaware Valley Association of Structural Engineers
Eastern Chapter of the Structural Engineers Association of Pennsylvania

1

Seminar Objectives

Discuss,

- Five structural failures
- Chronology and causes
- What can we learn from these failures?
- Are there common threads between them?
- Challenges common to projects

2

2

Some Historical Perspective

3

3

Fidenae Ampitheater

- Ban on Gladiator fighting lifted around 27 AD
- Timber-framed amphitheater built in Fidenae (outside Rome)
- Seating capacity: 50,000

Collapses – killing about 20,000

4

4

Fidenae Ampitheater

"…But he was at once recalled by the constant entreaties of the people, because of a disaster at Fidenae, where more than *twenty thousand spectators had perished* through the collapse of the amphitheatre during a gladiatorial show…."

"The Twelve Caesars" (121 AD)
Gaius Suetonius Tranquillus
(Roman Historian)

5

5

South Street Bridge Collapse

6

6

South Street Bridge Collapse

1878

7

7

https://architizer.com/idea/136836/ 8

8


https://www.wje.com/projects/detail/david-l-lawrence-convention-center
9

9

10

Hartford Civic Center Roof Collapse

11

11

Hartford Civic Center Roof Collapse

- Design started in 1971
- State-of-the-art software used to design space frame roof.
- Client paid for the software. They were told that using it would save $500k.
- Construction started in 1972.
- GC raises concern that space frame deflection is twice that anticipated. EOR brushes off concern.

12

12

Hartford Civic Center Roof Collapse

- Stadium opens in 1973. Occupants notice significant deflections.
- City of Hartford tells EOR about the complaints. EOR dismisses Owner's concern.
- January 1978: Biggest snowstorm since stadium completed. (Snow load = 50% of design snow load)

13

13

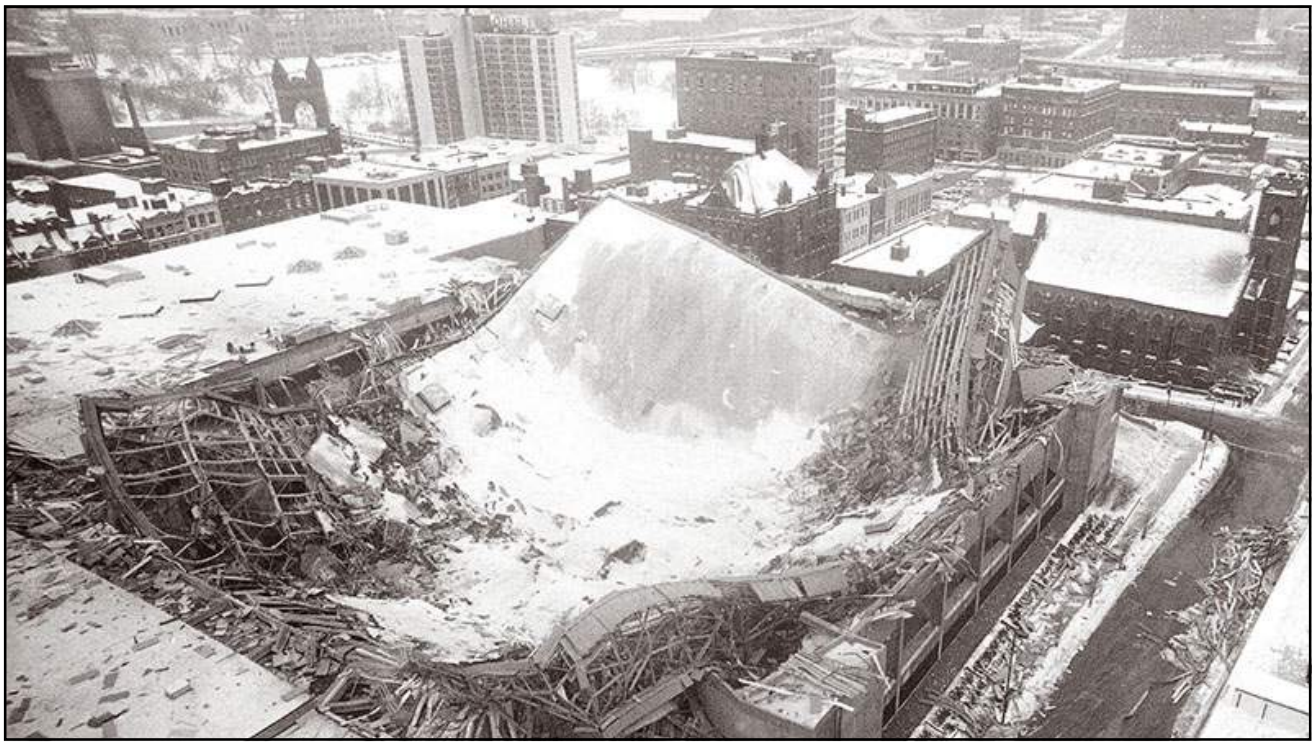

14

Hartford Civic Center Roof Collapse

- Roof collapses (Building empty. 5,000 were inside hours earlier.)

15

15

Hartford Civic Center Roof Collapse

- Forensic report: Many design problems. Biggest mistake was using the wrong top chord unbraced length. (15’ unbraced length used; 30’ actual.) Second error was not considering torsional buckling strength of cruciform top chords (vs. lateral buckling strength).
- EOR had false sense of security using the software.

16

16

Hartford Civic Center Roof Collapse

Causes

- Incorrect top chord unbraced length in model.
- Failure to check torsional buckling in top chord.
- EOR ignored concerns that there may be a problem.
- Complacency in using software.
- Failure to catch errors during design.

17

17

Hartford Civic Center Roof Collapse

Lessons learned

- Validate computer analyses with manual calculations.
- Verify that design assumptions are correct.
- Understand the Building Code and design standards.
- Understand all limit states.
- Listen when others raise concerns about your design.
- Peer review may have caught design errors.

18

18

Algo Mall Collapse

19

19

Algo Mall Collapse

Algo Center Mall and Hotel, Elliot Lake, Ontario (built 1980)

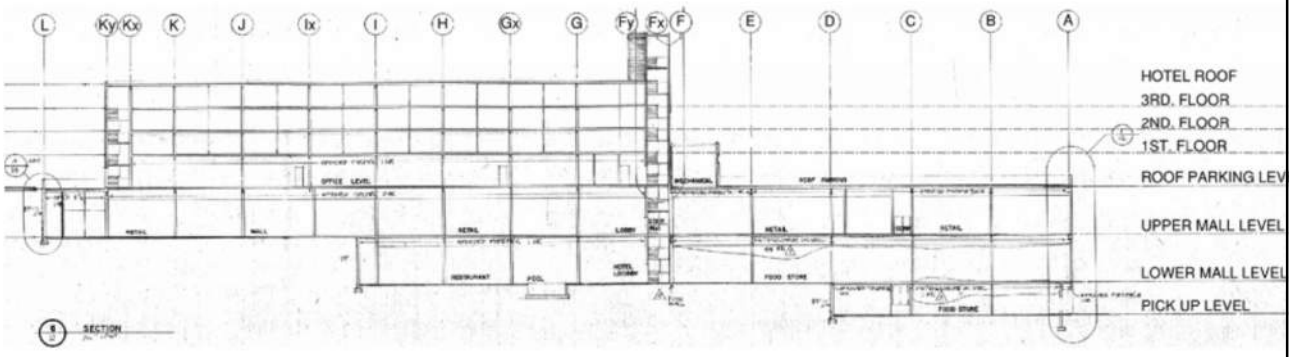

Figure 2-1 –Section View of Algo Centre Mall Looking North

From Forensic Engineering Investigation Algo Centre Mall Collapse, March 8, 2013, Hassan Saffarini, P. Eng., PhD

20

20

Algo Mall Collapse

- Three story steel-framed shopping mall & hotel w/ parking on roof
- 8” hollowcore plank on roof supported on steel framing. (Bad decision. Never use plank for a parking deck.)
- Plank specified to have 120 psf capacity (but 8” plank could not support 120 psf.)
- No waterproofing system on parking deck. (Topping slab, no membrane)
- Building plagued by roof leaks since new (1980).

21

21

Algo Mall Collapse

Ponding on roof (insufficient slope for drainage).

(a) (b)

Figure 4-5 – Ponding observed during on-site investigation (a) Along gridline C facing North (b) At gridline 11 facing South

22

22

Algo Mall Collapse

- June 2012: Two bays collapse - killing two.
- Collapse caused by failure of corroded beam-to-column connection.

23

23

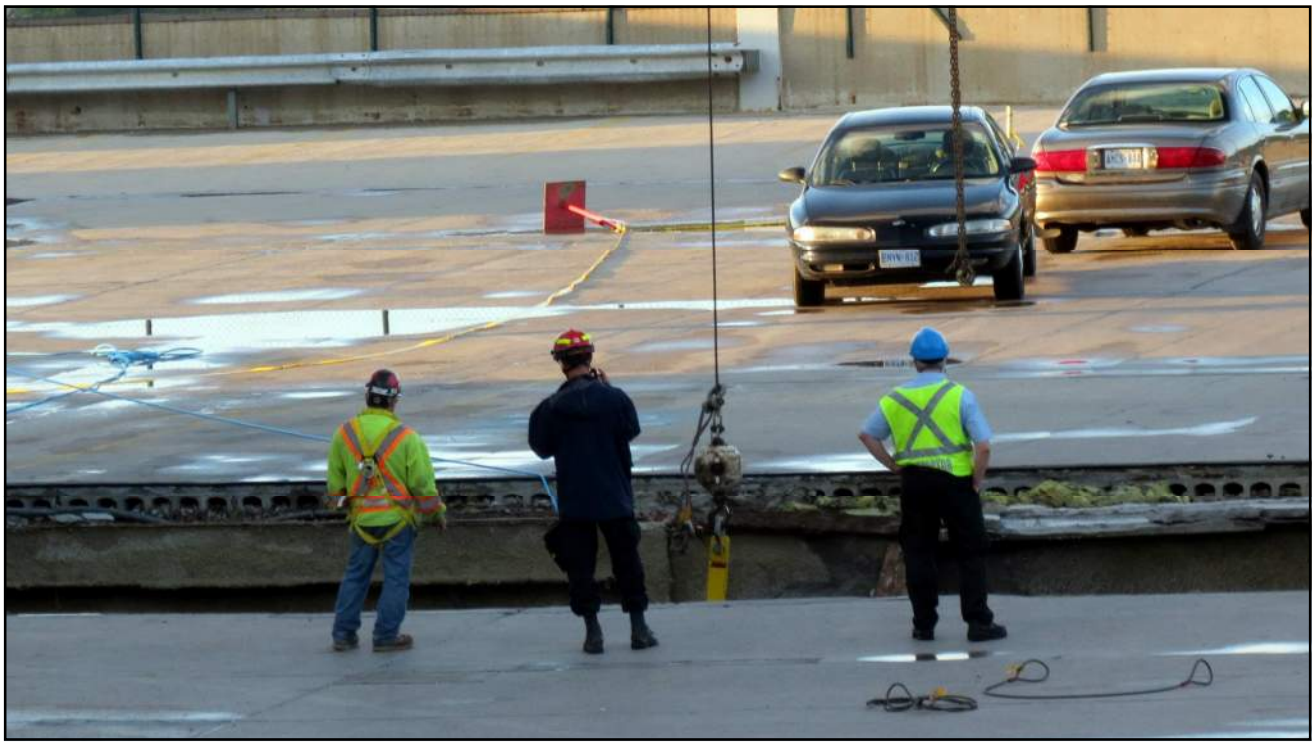

24

Algo Mall Collapse

- Many inspections performed by numerous consultants between 1980 and 2012 to investigate leaks. No one able to figure long-term solution.
- Repairs performed piecemeal, mostly by mall maintenance personnel.
- Three owners between 1980 and 2012.
- M.R. Wright & Associates, Inc (MRW), the engineer ultimately blamed for the collapse first hired to inspect for mold in 1985. Not a structural inspection. Performed multiple inspections over the years – mostly looking for mold.

25

25

Algo Mall Collapse

- Until 2005 inspections never mention corrosion.
- Elliot Lake building official notes corrosion of steel framing and connections in 2006 – and requires inspection by structural engineer.
- Owner hires engineer. Fires engineer. Inspection never happens.

26

26

Algo Mall Collapse

- MRW conducts another mold inspection in 2008. (Finds no mold, despite tenant complaints about mold.)
- Mall tenant hires engineer in 2008 to inspect roof framing. Mold and corrosion found. Tenant asks Landlord to hire engineer to inspect structure.
- MSW hired again in 2009 to look for mold. They find no mold.
- Leak repairs continue to be made by mall personnel.
- Drainage troughs installed in ceiling to divert water.

27

27

Algo Mall Collapse

- City performs inspection in 2009 and requires owner to hire engineer to address possible deterioration due to corrosion.
- MRW hired to address the city's concern about structural integrity. MRW states no evidence of severe corrosion, but notes water leaking through the roof and damaging fireproofing.
- Another engineer is hired to perform a structural inspection. Finds structurally deficient beams and recommends that a portion of the roof be closed off. He alerts fire marshal. He is fired by owner.

28

28

Algo Mall Collapse

- 2011 inspection performed to put solar panels on the parking deck. No repairs specified to repair corrosion damage in steel framing. Deal falls through. No solar panels.
- MRW performs another structural inspection in April 2012. Corrosion observed, but report mentions only a little section loss. No discussion of connections.
- Mall owner pressures MRW to remove information on leaks and corrosion, and owner submits fictitious repair invoices to mislead the mortgage holder about the building's condition.

29

29

Algo Mall Collapse

- For 32 years, 1980 to 2012, investigations focused on leaks and mold. Little attention paid to the condition of the steel framing.

30

30

Algo Mall Collapse

Two bays of framing collapse in June 2012 – killing two.

31

31

Algo Mall Collapse

- March 2013: Forensic report issued. Collapse was caused by a failure of a welded connection due to corrosion. Corrosion caused by improper waterproofing and placement of parking deck on roof, which allowed salt-laden water to corrode the structure.
- Original engineer and architect testified they objected to the rooftop parking, but the owner did not listen.

32

32

Algo Mall Collapse

"A ***communication breakdown*** at an Ontario engineering firm contributed to flaws in an inspection that failed to detect weaknesses in a mall roof before it collapsed." ***Engineering News Record*** *6/12/13*

LIABILITY

Communication Lapse Cited By Engineer in Mall Collapse

A communication breakdown at an Ontario engineering firm contributed to flaws in an inspection that failed to detect weaknesses in a mall roof before it collapsed, according to testimony by key witnesses at a special inquiry.

An engineer from the firm wrote, in May 2012, a report based on a visual inspection that found the mall roof to be sound only weeks before a section of the roof slab collapsed last June 23, killing two women inside. The inspecting engineer had a suspended license at the time, according to testimony on June 6 and 7 at the commission of inquiry conducted by the Ontario government in Elliot Lake.

Such inspections can be performed by much less senior engineering graduates,

company's assets have been sold.

Wood, who appeared contrite but dignified during hours of testimony, said he was sorry for the people who had lost their lives and what that had done to their families. He noted that his life was affected, too, and that he had retired because of the tragedy.

Wood had practiced engineering for 38 years and designed many structures in northern Ontario over the course of his career, according to Gregory Saunders, M.R. Wright's former engineering manager and minority partner. Saunders had signed off on Wood's visual inspection report regarding the mall roof.

Wood's license had been suspended because he had designed a small bridge on private land that failed to meet code.

33

33

Algo Mall Collapse

Causes:

- Poor design
- Bad idea to use hollowcore plank on parking decks.
- No waterproofing membrane.
- Plank capacity < 120 psf specified. (Additional capacity could have been used to support reinforced concrete topping slab.)
- Failure occurred gradually over 32 years (of neglect).
- No one focused on condition of the steel.
- Focus was on fixing leaks; and leaks were improperly repaired.
- Little focus on long-term maintenance.

34

34

Algo Mall Collapse

Lessons learned:

- Don't use hollowcore plank on parking decks.
- Look at big picture.
- Don't take on projects outside of your area of expertise.
- Parking structure design is a specialty
- Pay attention to the details and connections.
- Develop repair/restoration details that will last.
- Good communication is essential.
- Don't work for owners unwilling to spend money to do things the right way.
- Avoid complacency.

35

35

Harbour Cay Condominium Collapse

36

36

Harbour Cay Condominium Collapse

- 5-story condominium in Cocoa Beach, Florida
- 8” flat plate; fc’=4,000 psi
- 27’-8”x22’-2” bays supported by 10”x18” columns
- LLRS: Moment frames (10”x18” columns)
- Structural Engineers: Two former NASA engineers

37

37

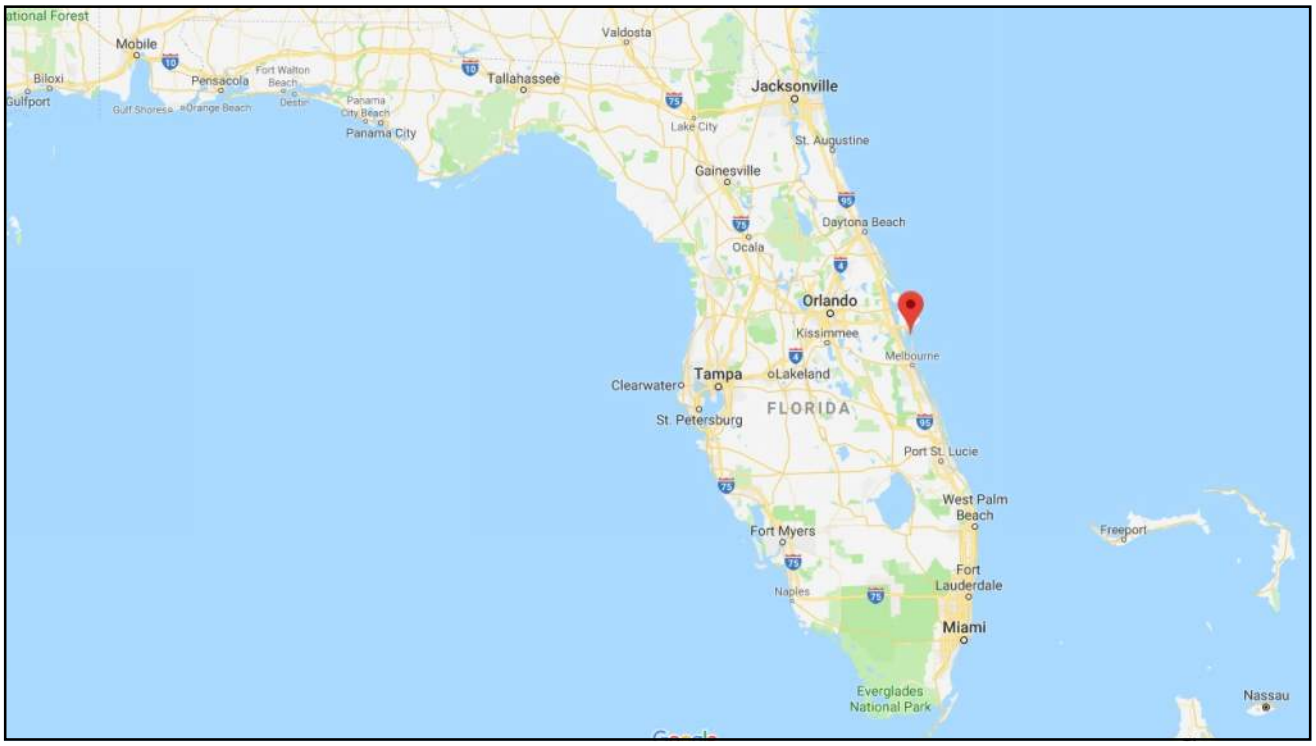

38

Harbour Cay Condominium Collapse

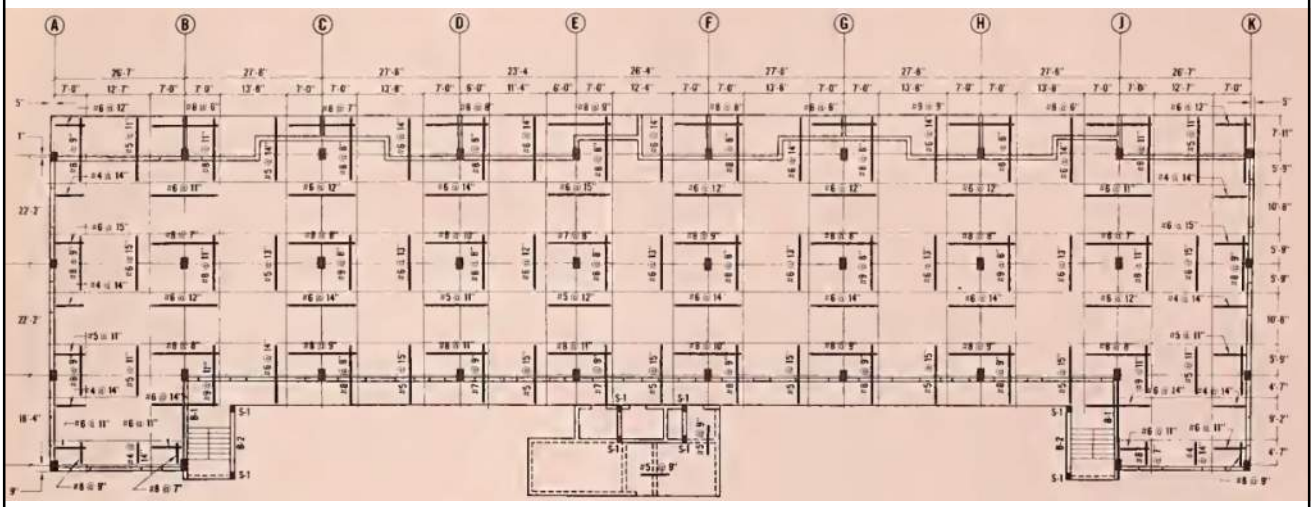

39

39

Harbour Cay Condominium Collapse

Structure collapses March 1981 as roof slab is poured – killing 11.

40

40

Harbour Cay Condominium Collapse

- The "…building was one of the most poorly designed" [I had ever seen]…
- "It was fortunate it was designed as badly as it was. If it had fallen down after occupancy - and it was doomed to fall - then a lot more people would have been killed and injured."

Oscar Olsen, P.E.
(St. Petersburg engineer who conducted an official inquiry for the Florida Department of Professional Regulation)

41

41

Harbour Cay Condominium Collapse

Causes:

- Structural design: Only 78 pages of calculations.
- 10"x18" columns too small for punching shear.
- Punching shear not checked (punching shear overstresses).
- Top bars placed 1" too low (reducing "d"; reducing punching shear strength)
- Engineers seemed to be working outside their area of expertise
- Both engineers lost their licenses

42

42

Harbour Cay Condominium Collapse

Lessons learned:

- Don’t ignore punching shear.
- Connection failures can be catastrophic
- Proper inspection by qualified inspectors is essential.
- Don’t work outside of your area of expertise.
- Read and understand the Engineering Code of Ethics.

43

43

Quebec City Bridge Collapse

44

44

Quebec City Bridge Collapse

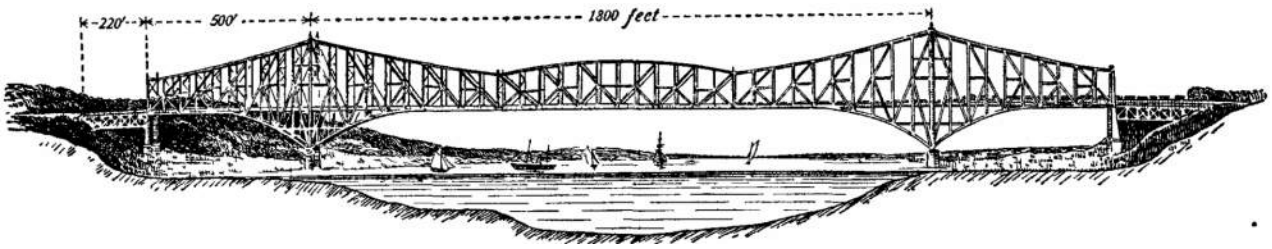

45

45

Quebec City Bridge Collapse

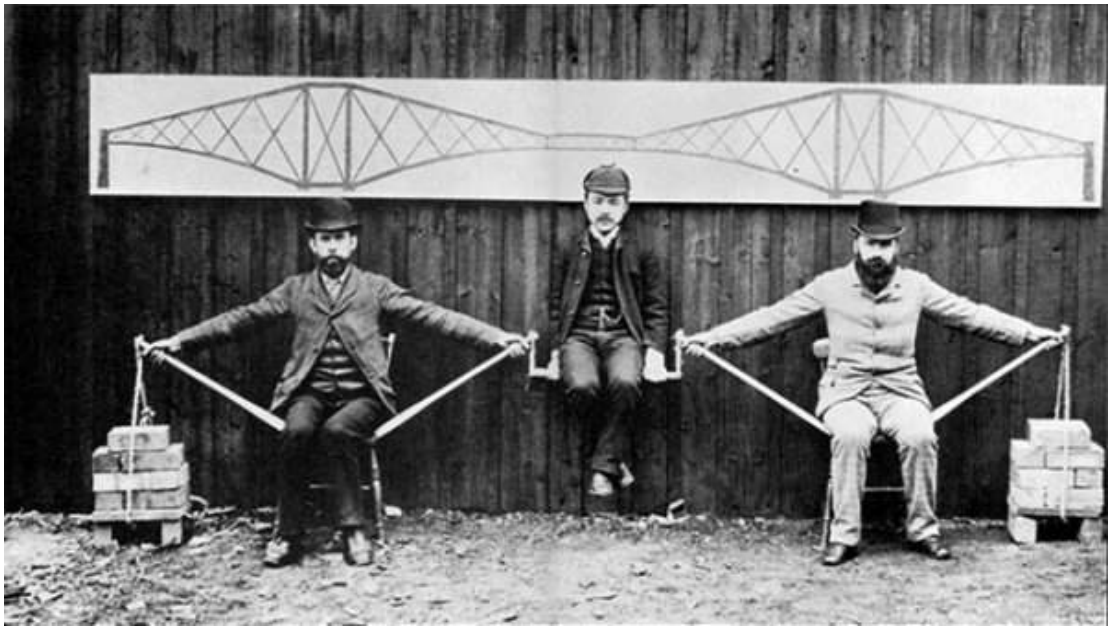

Model illustrating the principle of a cantilever span bridge (1890) (Public domain)

46

46

Quebec City Bridge Collapse

- Owner: Quebec Bridge Co. (Chief engineer: Edward Hoare)
- Engineer: Theodore Cooper (Field engineer: Norman McLure)
- Builder: Phoenix Bridge Company
- Span: 1800’ (Longest cantilever span in the world.)

47

47

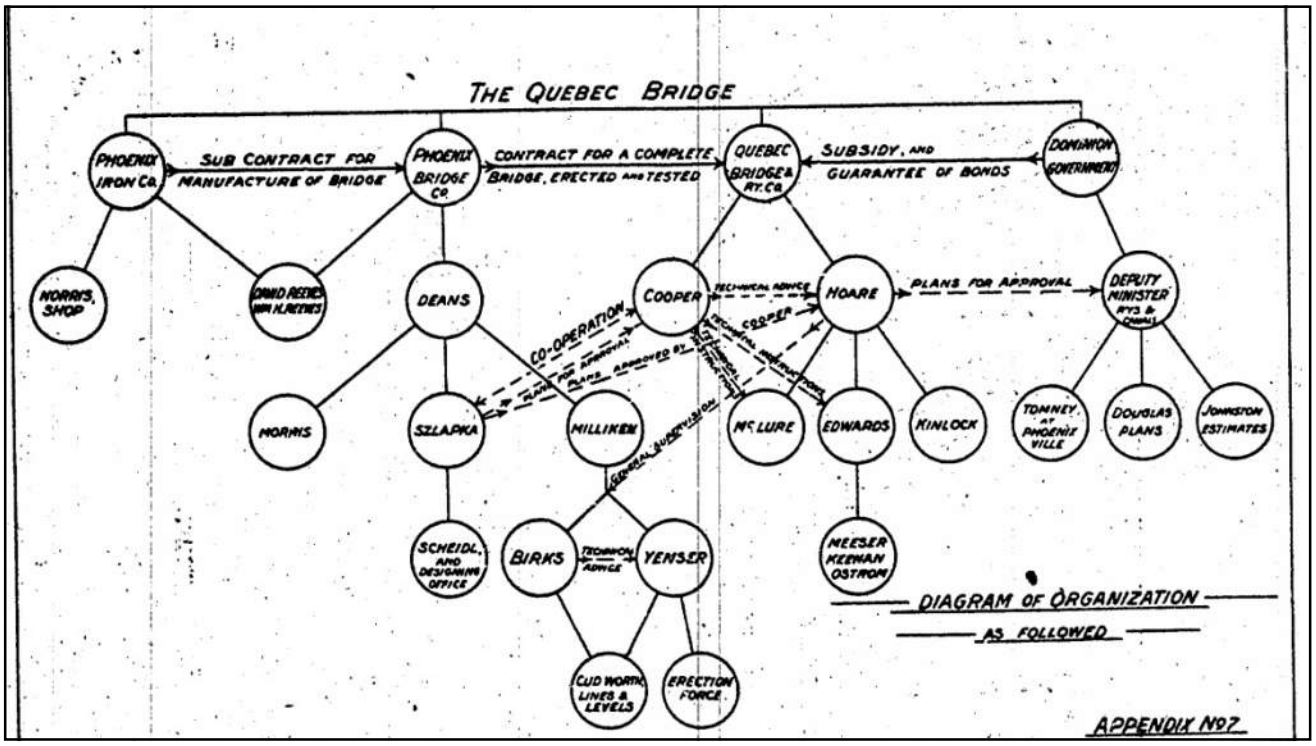

48

Quebec City Bridge Collapse

- Quebec Bridge Company had $$$ problems. (goal: “Best and cheapest.”)
- To save money Cooper,
  - Increases span from 1600’ to 1800’ to get piers in shallower water
  - Increases allowable stresses
- Quebec Bridge had no money to research stress increase. (Increase approved based on Cooper’s reputation.)
- Phoenix Bridge did not recalculate bridge weight due to increase in span.
- Cooper visits jobsite 3 times between 1900 and 1903. Afterwards manages project from NYC.

49

49

Quebec City Bridge Collapse

- 1903: Canadian Department of Railways and Canals requests peer review. Cooper refuses. “This puts me in the position of subordinate, which I cannot accept.”
- 1904: Cooper asks to resign. Quebec Bridge says “No”.
- Cooper hires Norman McLure to represent him on jobsite.
- 1904: Construction starts on largest bridge in the world with no experienced engineers on jobsite.

50

50

Quebec City Bridge Collapse

- Cooper or Phoenix should have recalculated the weight of the bridge between 1900 and 1903 when the project was on hold – but they didn't.
- 1905: Steel erection starts
- 1906: Phoenix calculates steel weight and calculates 18% increase from 31,000 tons to 36,500 tons because of longer span.
- Cooper signs off on the increased stresses, because otherwise they'd have to tear down the steel and start over.

51

51

Quebec City Bridge Collapse

- June 15: McLure notes pieces not fitting together. Cooper dismisses the problem. "…not serious."
- Members continue to distort. Latticed compression members not fully riveted, leading to further distortions.
- August 6: McLure reports bottom chords buckling. Cooper is worried.
- August 8: McLure reports additional chord members buckling. Phoenix said that the chords were bent when they left the shop.
- August 27: McLure measures 2.25" of bottom chord buckling deformation. *Writes* to Cooper.

52

52

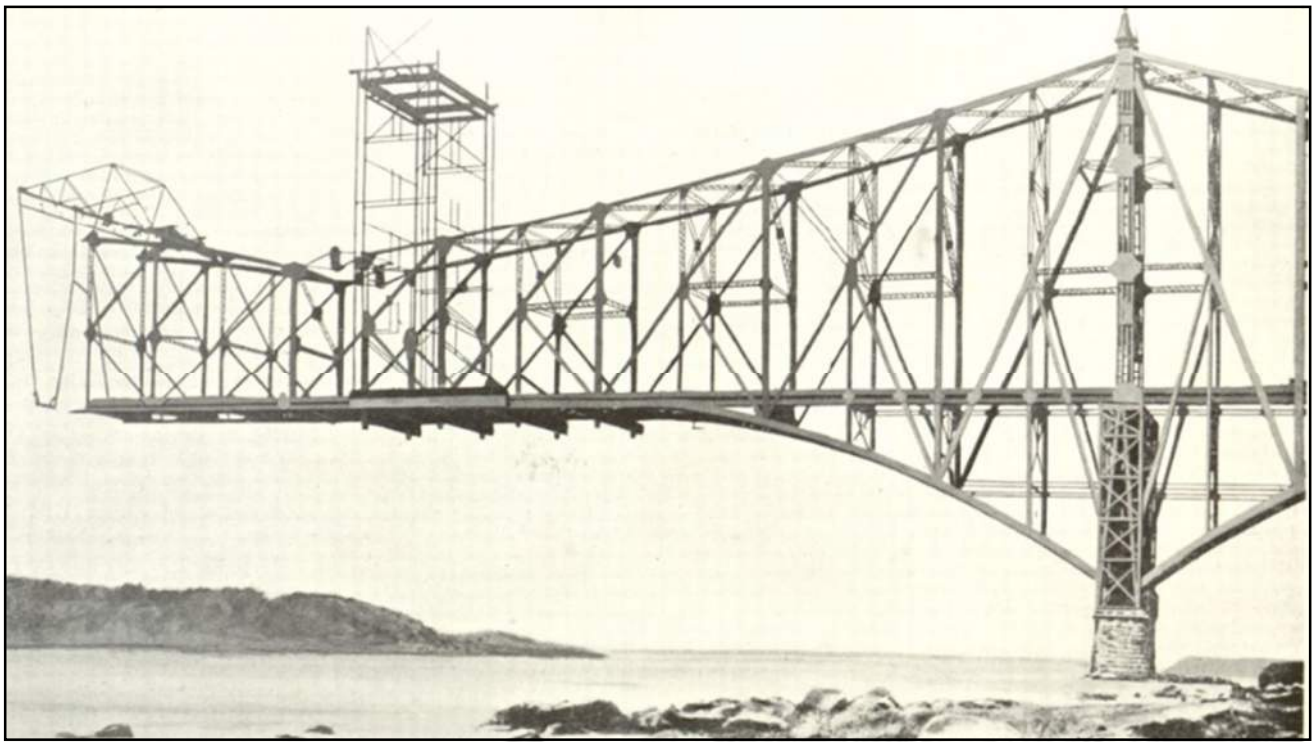

53

Quebec City Bridge Collapse

- Word spreads on bridge that chords are buckling, causing panic. Phoenix foreman suspends work.
- August 28: Work resumes at request of Quebec Bridge.
- No one knows what to do. Everyone is in over their heads. Hoare sends McLure to NYC to meet with Cooper.
- August 29: McLure meets with Cooper. Cooper telegraphs Phoenix Bridge (in Phoenixville), “Add no more load to bridge till after due consideration of facts. McLure will be over at 5:00.”

54

54

Quebec City Bridge Collapse

- Cooper thought work was stopped on August 28.
- McLure forgets to telegraph the jobsite – work continues.
- McLure arrives at Phoenixville at 5:00.
- Bridge collapses – killing 78 workers.

55

55

56

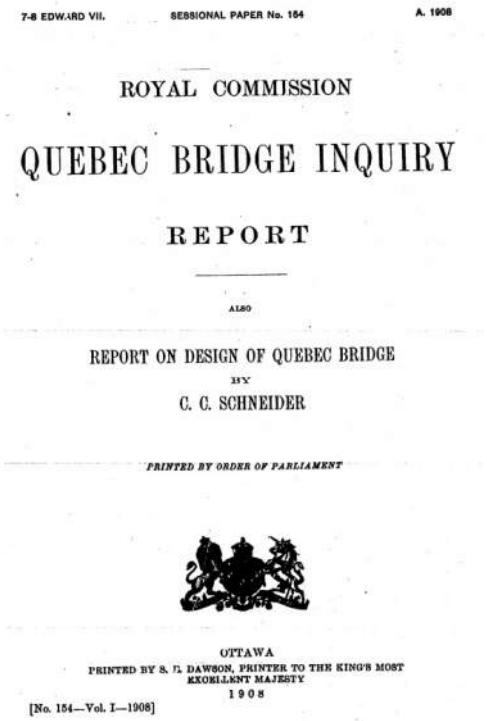

7-8 EDWARD VII. SESSIONAL PAPER No. 154 A. 1908

ROYAL COMMISSION

QUEBEC BRIDGE INQUIRY

REPORT

ALSO

REPORT ON DESIGN OF QUEBEC BRIDGE

BY

C. C. SCHNEIDER

PRINTED BY ORDER OF PARLIAMENT

OTTAWA

PRINTED BY S. E. DAWSON, PRINTER TO THE KING'S MOST EXCELLENT MAJESTY

1908

[No. 154—Vol. I—1908]

57

57

Quebec City Bridge Collapse

Conclusion of Inquiry:

"...<u>A grave error was made in assuming the dead load for the calculations at too low a value</u>...This error was of sufficient magnitude to have required the condemnation of the bridge, even if the details of the lower chords had been of sufficient strength."

58

58

Quebec City Bridge Collapse

Bridge today (weighs 2.5 times more than original.)

59

59

Quebec City Bridge Collapse

Causes:

- Design error: Failure to compute correct dead load.
- Unjustified increase in allowable stresses.
- Failure to quickly acknowledge a serious problem.
- Failure to have experienced staff on site.
- Miscommunication

60

60

Quebec City Bridge Collapse

Lessons learned:

- Quickly acknowledge and deal with problems
- Good communication is essential
- Don't put unqualified people in charge
- Avoid complacency
- Welcome constructive criticism (peer reviews)

61

61

Kansas City Hyatt Regency Skywalk Connection Failure

62

62

Kansas City Hyatt Regency Skywalk

63

63

Kansas City Hyatt Regency Skywalk

Recommended reading for all structural engineers

Chronology and Context of the Hyatt Regency Collapse

By Gregory P. Luth[1]

Abstract: This paper presents a brief chronology of the events that preceded the collapse of the walkways at the Kansas City Hyatt Regency Hotel, including the prior failure that occurred during construction and the evolution of the detail that caused the catastrophe. Many of the facts surrounding the case were not publicized, due to the litigation. Some were not brought out during the litigation. No attempt will be made to affix responsibility, as these issues were resolved years ago. The chronology is followed by a discussion of the events that contributed to the collapse and of the changes that have been made in the industry toward preventing a similar occurrence.

INTRODUCTION

On July 17, 1981, two walkways at the Hyatt Regency Hotel in the Crown Center development in Kansas City, Missouri, collapsed during a "tea dance." A full chronology of events is provided in table form (Table 1). The result of the collapse was that 114 people lost their lives and numerous others were injured. It is worthwhile to look back on the events leading up to the events of July 17 to determine what actions or omissions contributed to the tragedy and what actions might have averted the tragedy. The writer was a recent graduate working in the offices of the firm that performed the structural design of the Hyatt Regency. This paper presents a brief, objective, and factual summary of those events in chronological sequence in order to provide a context in which the profession might study and evaluate the lessons of the failure.

The project design was performed under the "fast track" method of delivery that came into vogue in the latter part of the 1970s. As with many projects delivered by this method, construction preceded design, structural design preceded ar-

(120 ft), supported on slide bearings that rested on concrete corbels on the function block end. One side of the atrium roof structure would be supported on a system of vertical frames that formed a "sun screen" and also functioned to support a four-story glass wall. Communication between the function block and hotel floors was provided by a system of walkways at the 2nd, 3rd, and 4th floors.

Production of construction documents was ongoing between July 1977 and January 1978. Because of architectural constraints, the sunscreen structure evolved into a vertical truss that picked up loads at the roof on one chord and dropped them off at the first floor at the other chord in order to avoid loading the concrete floor system at the first floor. The inside chord of the sunscreen truss, which functions as a column, was designed to be provided with lateral support by structural tubes that also supported the curtain wall. Early schemes called for the walkways to be supported on posts off of the concrete floor at the first level. Later, the decision was made to suspend the walkways from the roof structure to give a light and airy feel to the atrium space. Fig. 1 shows floor plans of the roof

From "Chronology and Context of the Hyatt Regency Collapse" by Gregory P. Luth

64

64

Kansas City Hyatt Regency Skywalk

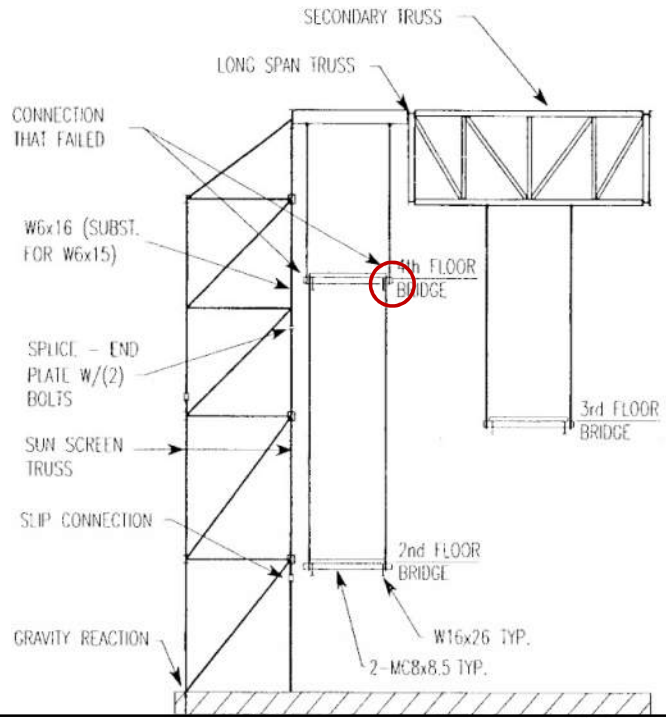

From "Chronology and Context of the Hyatt Regency Collapse" by Gregory P. Luth

65

65

Kansas City Hyatt Regency Skywalk

- Design from July 1977 to January 1978
- Foundation bid package issued January 1978; Steel was in "design development".
- Fast-track construction
- Project priced / contract awarded.

66

66

Kansas City Hyatt Regency Skywalk

- High inflation; 12% interest rates in 1979
- Project suffered from lack of time and quality control
- Multiple personnel changes at EOR's office. Project engineer and senior project designer left in June 1978. Project manager was only remaining person with knowledge of project.

67

67

Kansas City Hyatt Regency Skywalk

- Mid 1978: Hanger connection issued with eccentric connections

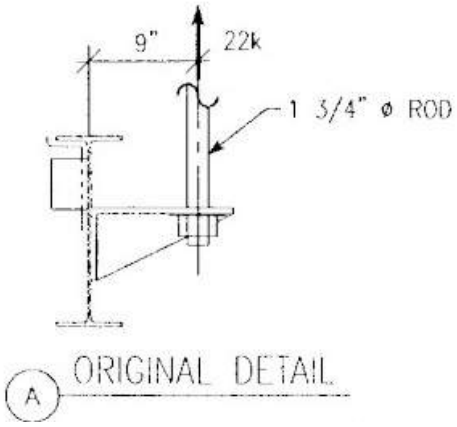

From "Chronology and Context of the Hyatt Regency Collapse" by Gregory P. Luth

68

68

Kansas City Hyatt Regency Skywalk

- Mid 1978: Architect asks for hangers to be downsized from 1 ¾" to 1 ¼" diameter to "lighten up" appearance. (Final design was 5.25" with 2" of fireproofing.)

69

69

Kansas City Hyatt Regency Skywalk

- Mid 1978: Hanger connection revised using double channel and 60 ksi single rod hanger. 22k reaction shown on sketch.

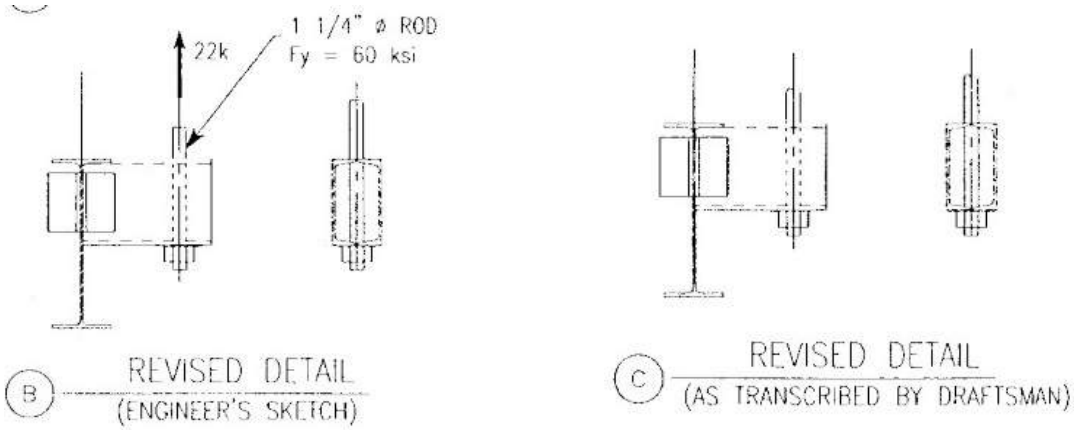

From "Chronology and Context of the Hyatt Regency Collapse" by Gregory P. Luth

70

70

Kansas City Hyatt Regency Skywalk

Original double channel detail was seriously overstressed.

Strength ratio = 1.67

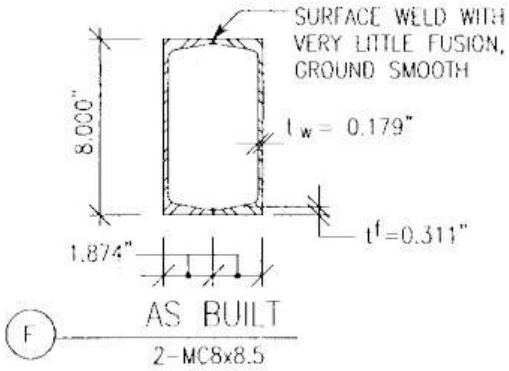

From "Chronology and Context of the Hyatt Regency Collapse" by Gregory P. Luth

71

71

Kansas City Hyatt Regency Skywalk

- August 1978: Drawings issued for construction

72

72

Kansas City Hyatt Regency Skywalk

- December 1978: Contract awarded to fabricator
- January 1979: Fabricator's engineer requests change in hanger detail from one hanger to two via phone conversation with EOR. EOR agrees with concept but asks that request be forwarded formally "through channels". (Did not happen.)

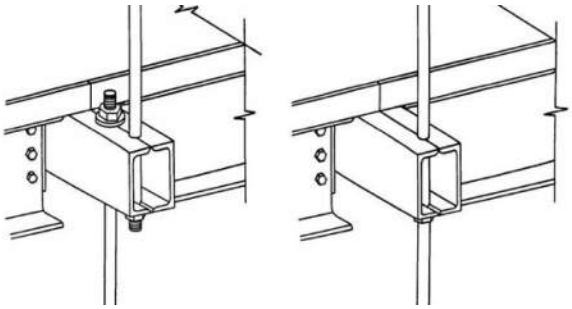

73

73

Hyatt Regency Connection Failure

Revised detail increased hanger reaction from 22k to 44k on outer hanger.

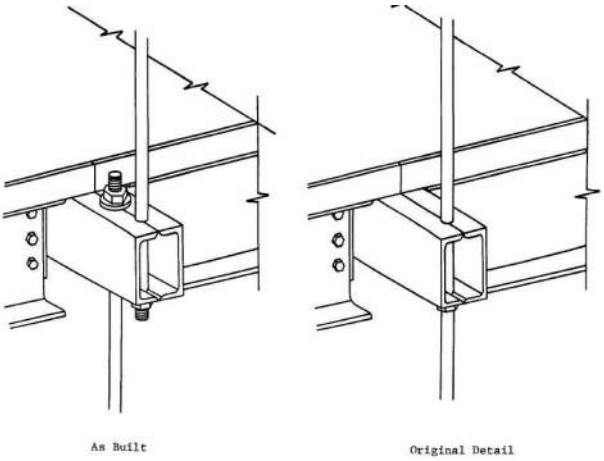

Figure 10.2 Comparison of interrupted and continuous hanger rod details.

74

74

Hyatt Regency Connection Failure

Strength ratio of revised detail = 3.23 >> 1 (no good!)

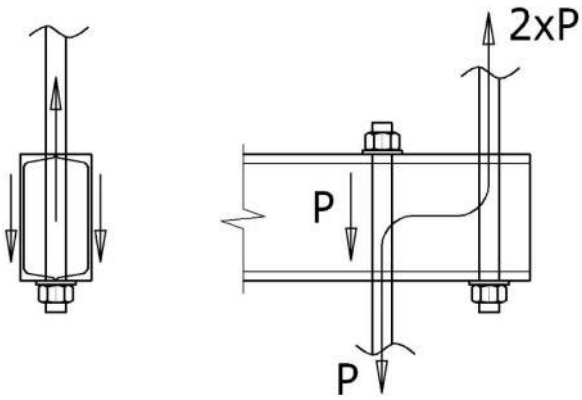

One kink in original connection; Three kinks in revised connection.

75

75

Kansas City Hyatt Regency Skywalk

January 1979: Fabricator subs production of shop drawings to outside detailer. Detailer assumes revised double hanger connection was fully designed.

February 1979: Shop drawings reviewed by EOR. Review performed by a “senior technician”. EOR assumes hanger connection was designed by the fabricator’s engineer. (But it was not, because fabricator did not see reaction and assumed connection was designed by EOR.)

76

76

Kansas City Hyatt Regency Skywalk

Summer 1979: Embedded plates at expansion joint connection to tower missed. Retrofit detail with expansion bolts issued. As-built connections had only half the required number of bolts with half the required embedment. Inspection agency fired. EOR requests field representation – but is ignored.

October 1979: Deficient expansion bolt connection fails. Two bays of roof collapse. No one hurt.

October 1979: Inspections reveal numerous design and construction deficiencies at interface between steel-framed atrium and concrete tower.

77

77

Kansas City Hyatt Regency Skywalk

October 1979: Owner hires another firm to investigate collapse and review design.

November 1979: EOR performs an in-house peer review. Review performed by engineer with 3 years experience. Potential fatal flaw found in sunscreen truss (splice connection). Flaw fixed. Problems with hanger connections not found.

General Contractor files for bankruptcy. Owner takes over construction.

July 1980: Hotel opens

78

78

79

80

80

Hyatt Regency Connection Failure

Based on measured weights of damaged walkway spans and on a videotape showing occupancy of the second floor walkway just before the collapse, it is concluded that the maximum load on a fourth floor box beam-hanger rod connection at the time of collapse was only 31 percent of the ultimate capacity expected of a connection designed under the Kansas City Building Code. It is also concluded that had the original hanger rod arrangement not been changed, the ultimate capacity would have been approximately 60 percent of that expected under the Kansas City Building Code. With this change in hanger rod arrangement, the ultimate capacity of the walkways was so significantly reduced that, from the day of construction, they had only minimal capacity to resist their own weight and had virtually no capacity to resist additional loads imposed by people.

Overstress in original connection detail: Strength ratio = 1/0.6 = 1.67

Overstress in revised connection detail: Strength ratio = 1/0.31 = 3.23

81

81

Kansas City Hyatt Regency Skywalk

Structural failure occurred in what some would consider minor detail in a large and complex project.

82

82

Kansas City Hyatt Regency Skywalk

Causes:

- Drafting error
- Failure by EOR to consider constructability
- Failure by EOR to provide adequate "concept connection details"
- Communication failure between fabricator's engineer and EOR
- **Failure (by everyone) to design the hanger connections**
- Aggressive fast-track schedule and understaffing by EOR
- Discontinuity in EOR's project staffing
- Shop drawing review by technician unfamiliar with project

83

83

Kansas City Hyatt Regency Skywalk

Lessons learned:

- Good communication can prevent structural failures
- Drafting errors can be catastrophic
- Listen for mitigated speech. (Listen to what is said and what is not said.)
- The drawings communicate design intent. (Must be high quality.)
- Engineers must consider constructability
- Connection failures can be catastrophic

84

84

Kansas City Hyatt Regency Skywalk

Lessons learned:

- Pay attention to connection details even when delegating connection design
- Staff projects with engineers with appropriate experience
- Don't "kick the can down the road". Inexperienced engineers will not catch design mistakes during shop drawing.
- Shop drawings should be reviewed by people familiar with the project.
- EOR is ultimately responsible for connection design.

A "Hyatt Regency" type failure can happen again.

85

85

Summary

Primary causes of structural failures:

- Poor communication
- Lack of attention to connection details
- Design errors (and lack of peer reviews to catch them)
- Blind reliance on software
- Complacency (Failure to ask, "Does this look right?")
- Fast schedules and budget pressures

86

86

Summary

Observations

- Pay attention to the connections.
- Connection failures can be catastrophic.
- Peer reviews are essential.
- The profession is slow to learn / change.
- Frequent blind reliance on software is dangerous.
- The road to structural failures can be a long, gradual one.
- Be on the lookout for complacency. Never let your guard down.
- Understanding causes of past mistakes will help avoid future ones.

87

87

Thank you!

Questions?

Clifford Schwinger, PE

cschwinger@harmangroup.com

THE HARMAN GROUP
structural engineering
parking planning and design

PHILADELPHIA | NEW YORK

DVASE | Delaware Valley Association of Structural Engineers
Eastern Chapter of the Structural Engineers Association of Pennsylvania

88